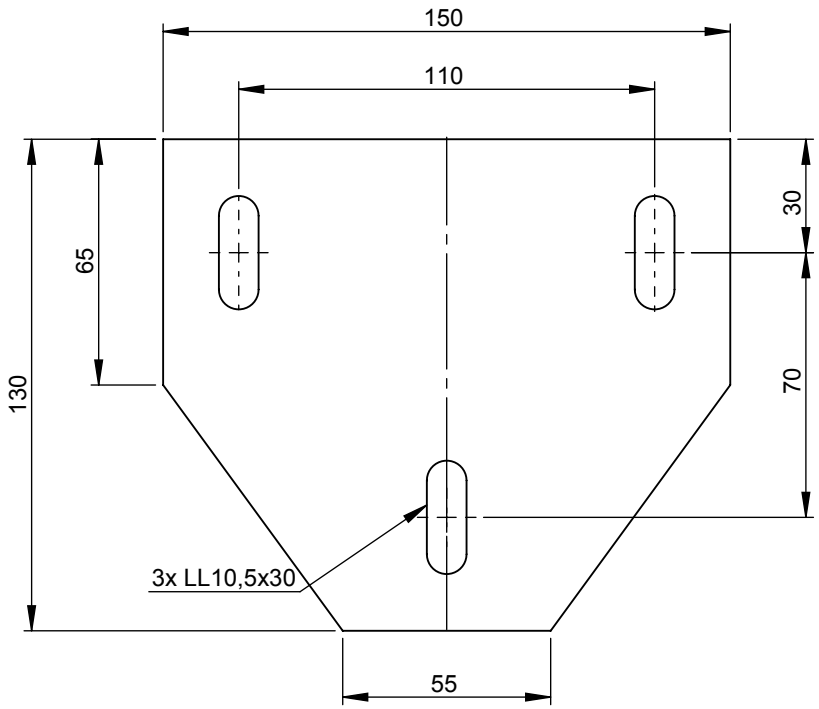

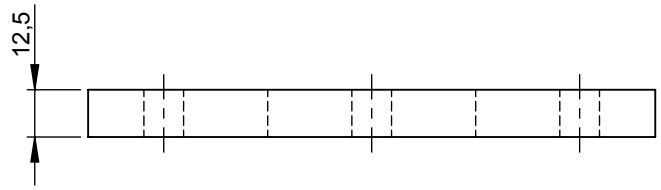

M1:3

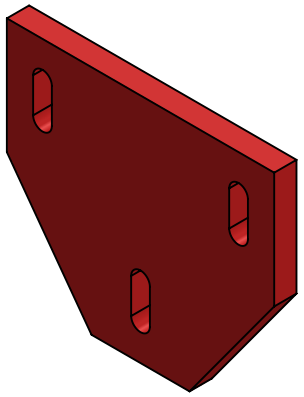

material: inside/outside: Sylomer SR 220-12	surface: inside/outside: Rot	DIN ISO 13920 Tolerances B	jeremias® CHIMNEY SYSTEMS
		revisions-no. A4	mm / kg

notes:		date	name
	drawn by	12.10.2017	KAB
	checked by		
	approved by		
	modified by		

description: Matte zur Schallentkopplung
Typ AS/BS/CS/DS >Ø500mm

code: **ZUAC2247**

drawing-no.: **07-04-0019-000**

scale: 1:2

format: A4

sheet: 1 of 1

© jeremias GmbH. All rights reserved, also regarding any disposal, exploitation, editing, distribution, as well as in the event of applications for industrial property rights.