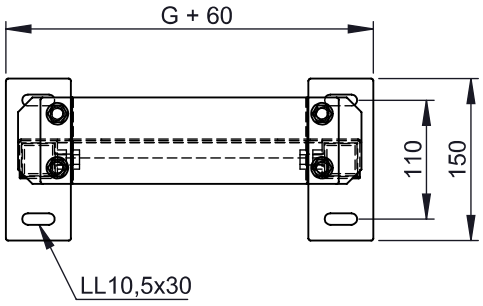

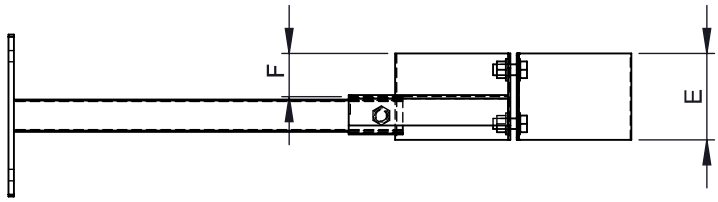

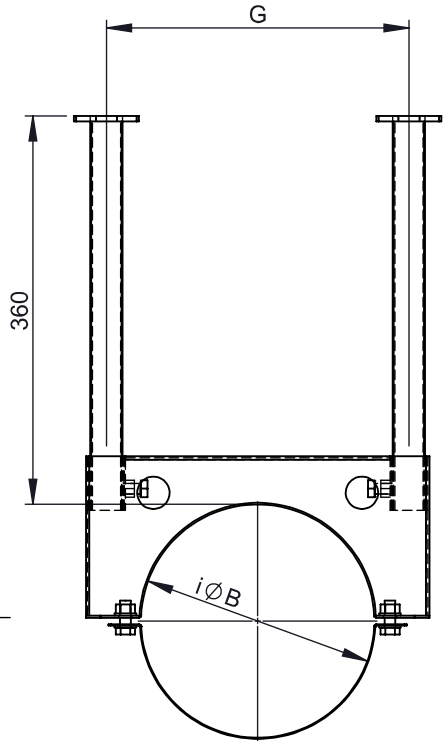

Ausführung Wandplatte bis Ø450:

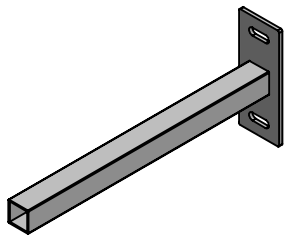

Ausführung Wandplatte ab Ø500:

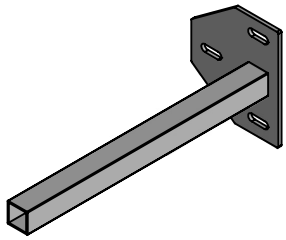

M1:10 (Ø150)

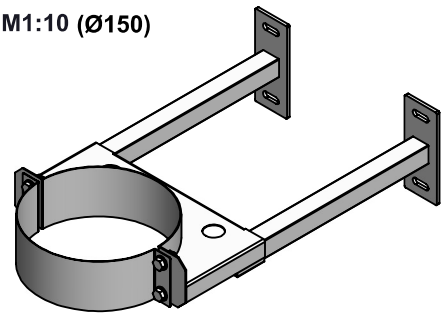

Ø	200	225	250	300	350	400	450	500	550	600
B	266	291	316	366	416	466	516	566	616	666
E	80									
F	40									
G	330	355	380	430	480	530	580	630	680	730
kg	4,1	4,2	4,4	4,8	5,1	5,4	5,7	6	6,3	6

Ø	80	100	110	115	120	125	130	140	150	160	180
B	146	166	176	181	186	191	196	206	216	226	246
E	80										
F	40										
G	210	230	240	245	250	255	260	270	280	290	310
kg	3,5	3,6	3,6	3,6	3,7	3,7	3,7	3,8	3,8	3,9	4

notes:

DIN ISO 13920 Tolerances B

revisions-no. A2 | mm / kg

	date	name
drawn by	09.05.2019	SME
checked by		
approved by		
modified by	16.01.2026	NMA

jeremias® CHIMNEY SYSTEMS

description: statischer Wandhalter, starr, WA 50-360mm (Typ DS)
passend für Isolierstärke 32,5 mm

code: **DW48 / DWV48**

drawing-no.: **01-07-04-0275-000**

scale: 1:7

format: A4

sheet: 1 of 3

© jeremias GmbH. All rights reserved, also regarding any disposal, exploitation, editing, distribution, as well as in the event of applications for industrial property rights.

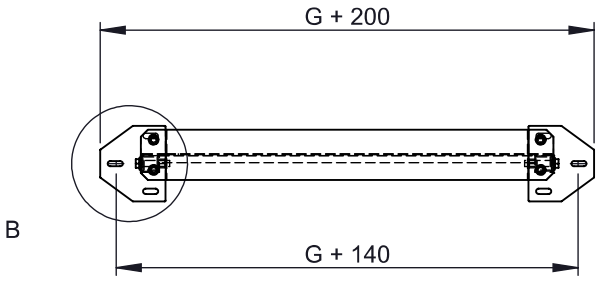

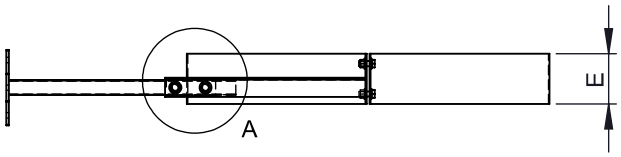

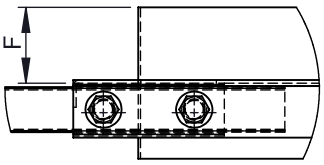

DETAIL A (1 : 5)

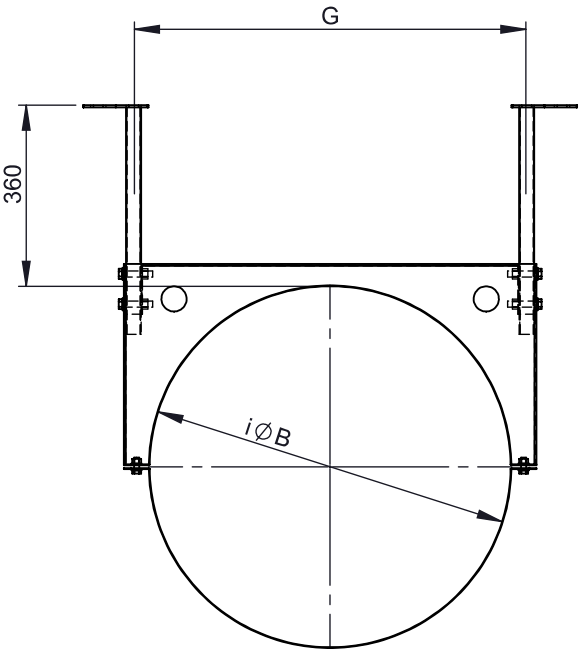

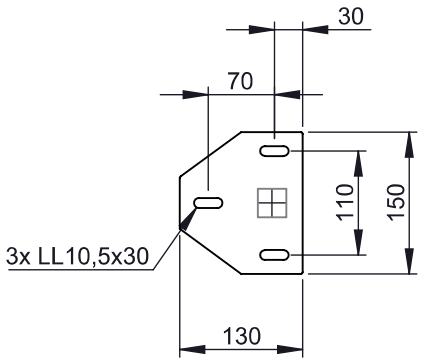

DETAIL B (1 : 5)

M1:20 (Ø650)

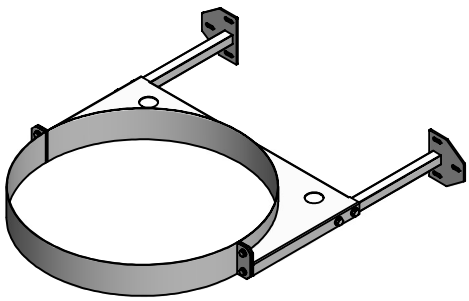

Ø		**650**		**700**		**750**		**800**		**850**		**900**
B		716		766		816		866		916		966
E	100											
F	50											
G		780		830		880		930		980		1030
kg		8,8		9,2		9,6		10,1		10,5		10,6

notes:

DIN ISO 13920 Tolerances B

revisions-no. A2 | mm / kg

	date	name
drawn by	09.05.2019	SME
checked by		
approved by		
modified by	16.01.2026	NMA

jeremias® CHIMNEY SYSTEMS

description: statischer Wandhalter, starr, WA 50-360mm (Typ DS)
passend für Isolierstärke 32,5 mm

code: **DW48 / DWV48**

drawing-no.: **01-07-04-0275-000**

scale: 1:15

format: A4

sheet: 2 of 3

© jeremias GmbH. All rights reserved, also regarding any disposal, exploitation, editing, distribution, as well as in the event of applications for industrial property rights.

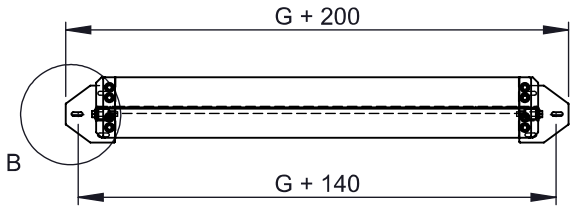

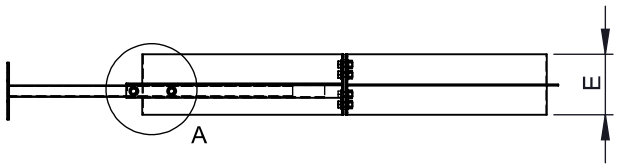

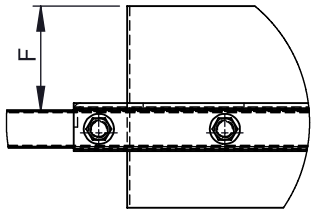

DETAIL A (1 : 6)

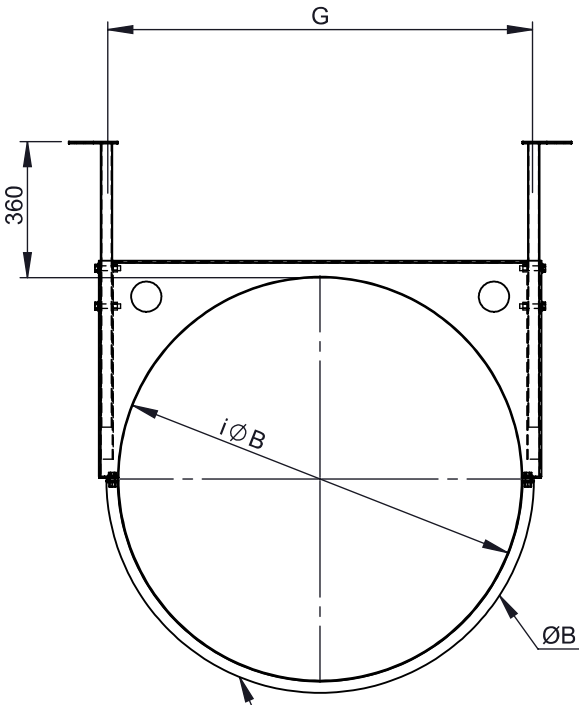

ACHTUNG:
Ø1000 + Ø1015 ohne Ringsteife!

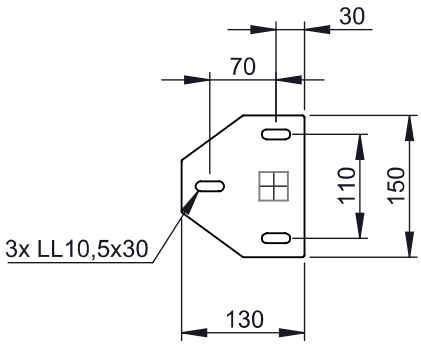

DETAIL B (1 : 5)

M1:25 (Ø1000)

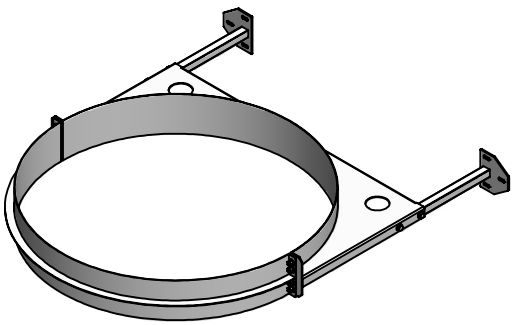

Ø		950		1000		1050		1100		1150		1200		1250
B		1016		1066		1116		1166		1216		1266		1316
E	160													
F	80													
G		1080		1130		1180		1230		1280		1365		1380
kg		13,6		20,3		21,2		22,1		23		24		24,9

notes:

DIN ISO 13920 Tolerances B

revisions-no. A2 | mm / kg

	date	name
drawn by	09.05.2019	SME
checked by		
approved by		
modified by	16.01.2026	NMA

jeremias® CHIMNEY SYSTEMS

description: statischer Wandhalter, starr, WA 50-360mm (Typ DS)
passend für Isolierstärke 32,5 mm

code: **DW48 / DWV48**

drawing-no.: **01-07-04-0275-000**

scale: 1:20

format: A4

sheet: 3 of 3

© jeremias GmbH. All rights reserved, also regarding any disposal, exploitation, editing, distribution, as well as in the event of applications for industrial property rights.