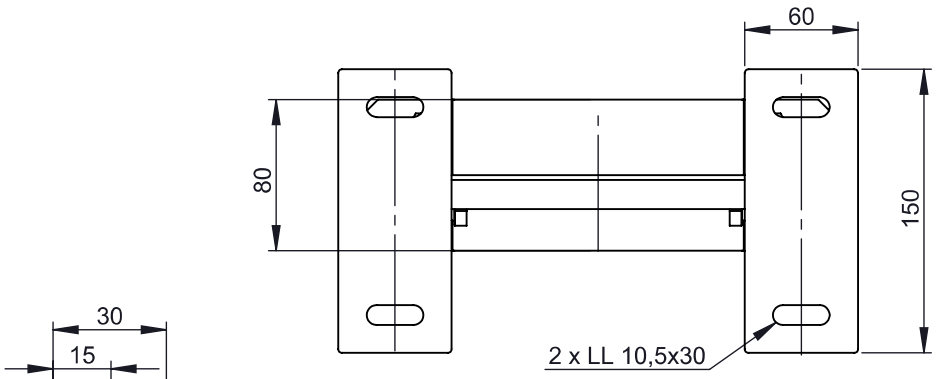

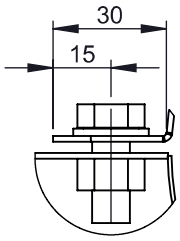

A (1 : 2)

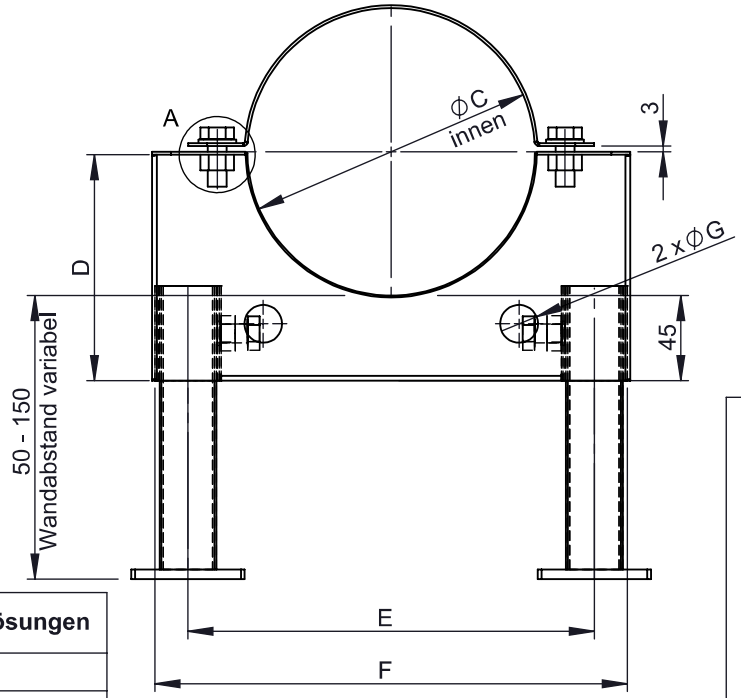

M 1:8 (Ø080)

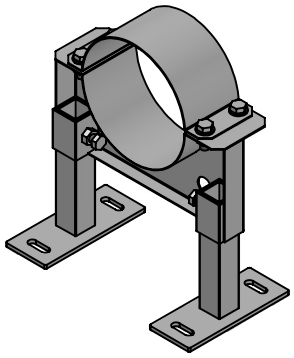

Beispiel für mögliche Materiallösungen

WGR	MAT
2R2	1.4301(304)-2R(IIID)
2B2	1.4301(304)-2B(IIIC)
2J2	1.4301(304)-2J(GEB)FO

Ø	80	100	110	115	120	125	130	140	150
C	146	166	176	181	186	191	196	206	216
D	117	127	132	134	137	139	142	147	152
E	210	230	240	245	250	255	260	270	280
F	245	265	275	280	285	290	295	305	315
G	20							30	
kg	2,44	2,53	2,58	2,6	2,62	2,65	2,67	2,71	2,75

Ø	160	180	200	225
C	226	246	266	291
D	157	167	177	189
E	290	310	330	355
F	325	345	365	390
G	30			
kg	2,8	3,11	3,2	3,5

notes:

DIN ISO 13920 Tolerances B

revisions-no. A11 | mm / kg

	date	name
drawn by	12.04.2021	KSA
checked by		
approved by		
modified by	20.01.2026	NMA

jeremias® CHIMNEY SYSTEMS

description: Wandhalter statisch, verstellbar, Wandabstand 50-150mm (Typ BS) passend für Isolierstärke 32,5 mm

code: **DW46**

drawing-no.: **01-07-04-0271-000**

scale: 1:4

format: A4

sheet: 1 of 2

© jeremias GmbH. All rights reserved, also regarding any disposal, exploitation, editing, distribution, as well as in the event of applications for industrial property rights.

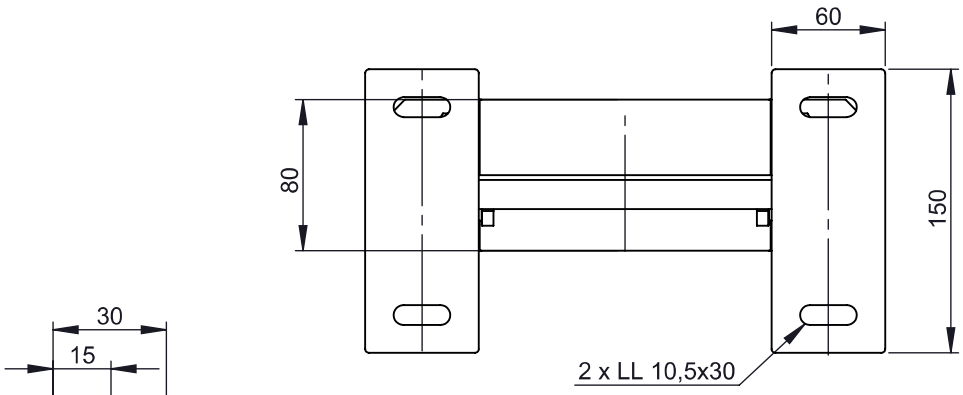

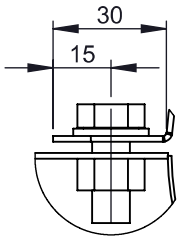

A (1 : 2)

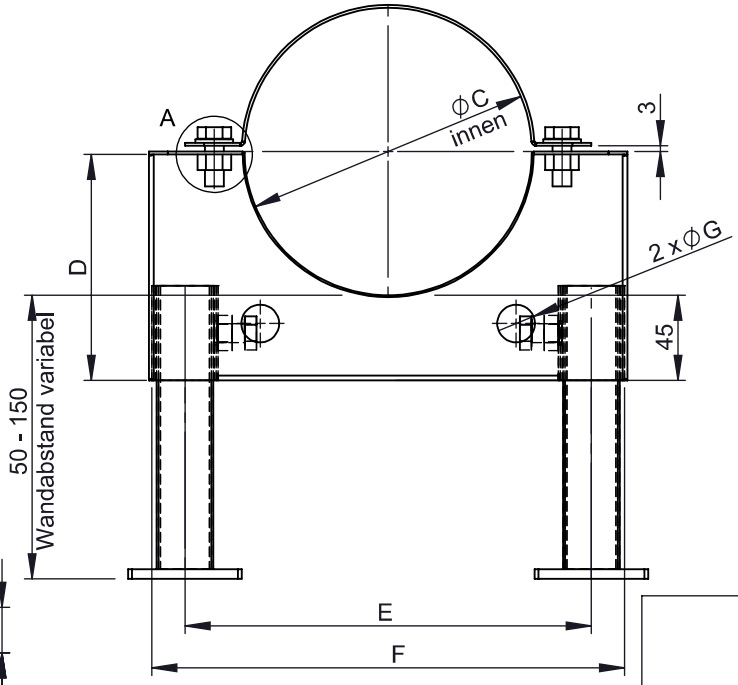

Wandplatte ab Ø450

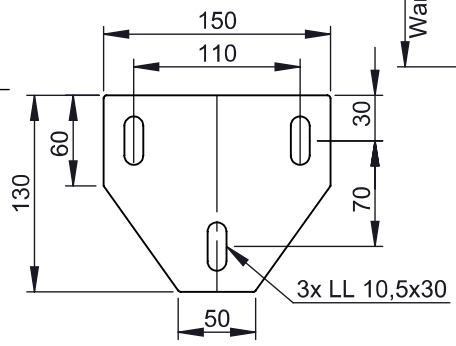

M 1:15 (Ø500)

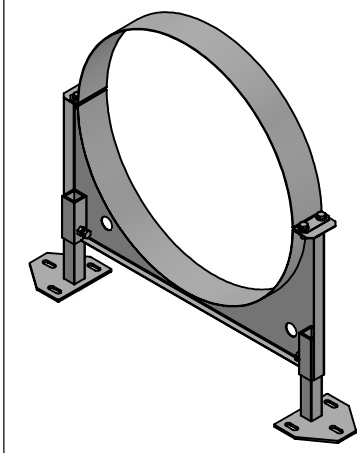

Beispiel für mögliche Materiallösungen	
WGR	**MAT**
2R2	1.4301(304)-2R(IIID)
2B2	1.4301(304)-2B(IIIC)
2J2	1.4301(304)-2J(GEB)FO

Ø	**250**							**300**		**350**		**400**			**450**			**500**		**550**			**600**
C	316							366		416		466			516			566		616			666
D	202							227		252		277			302			327		352			377
E	380							430		480		530			580			630		680			730
F	415							465		515		565			615			665		715			765
G	30																						
kg	3,62							3,87		4,12		4,38			4,65			4,92		5,72			6,0

notes:

DIN ISO 13920 Tolerances B

revisions-no. A11 | mm / kg

	date	name
drawn by	12.04.2021	KSA
checked by		
approved by		
modified by	20.01.2026	NMA

jeremias® CHIMNEY SYSTEMS

description: Wandhalter statisch, verstellbar, Wandabstand 50-150mm (Typ BS)
passend für Isolierstärke 32,5 mm

code: **DW46**

drawing-no.: **01-07-04-0271-000**

scale: 1:4

format: A4

sheet: 2 of 2

© jeremias GmbH. All rights reserved, also regarding any disposal, exploitation, editing, distribution, as well as in the event of applications for industrial property rights.