

A (1 : 2)

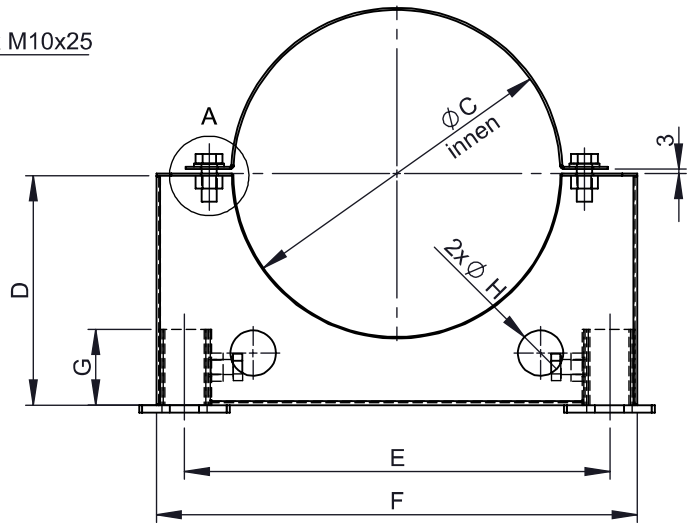

M 1:8 (Ø080)

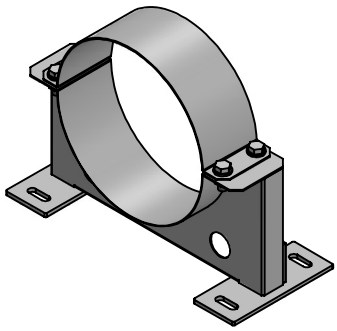

Beispiel für mögliche Materiallösungen	
WGR	**MAT**
2B2	1.4301(304)-2B(IIIC)
2R2	1.4301(304)-2R(IIID)
2J2	1.4301(304)-2J(GEB)FO

Ø						**80**			**100**		**110**	**115**	**120**	**125**
C						146			166		176	181	186	191
D						117			127		132	134	137	139
E						210			230		240	245	250	255
F						245			265		275	280	285	290
G	50													
H	20													
kg						2,1			2,2		2,2	2,2	2,3	2,3

Ø	**130**		**140**		**150**		**160**				**180**			
C	196		206		216		226				246			
D	142		147		152		157				167			
E	260		270		280		290				310			
F	295		305		315		325				345			
G	50								100					
H	20	30												
kg	2,3		2,4		2,4		2,4				2,9			

notes:

DIN ISO 13920 Tolerances B

revisions-no. A3 | mm / kg

	date	name
drawn by	07.09.2018	FBA
checked by		
approved by		
modified by	16.01.2026	NMA

jeremias CHIMNEY SYSTEMS

description: Wandhalter statisch, starr, Wandabstand 50-100mm (Typ AS)
passend für Isolierstärke 32,5 mm

code: **DW45 / DWV45**

drawing-no.: **01-07-06-0250-000**

scale: 1:5

format: A4

sheet: 1 of 1

© jeremias GmbH. All rights reserved, also regarding any disposal, exploitation, editing, distribution, as well as in the event of applications for industrial property rights.

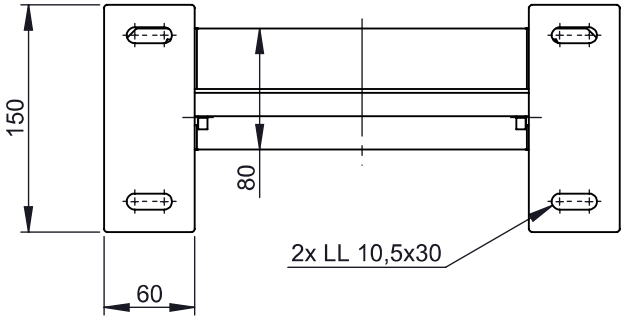

Wandplatte ab (Ø450)

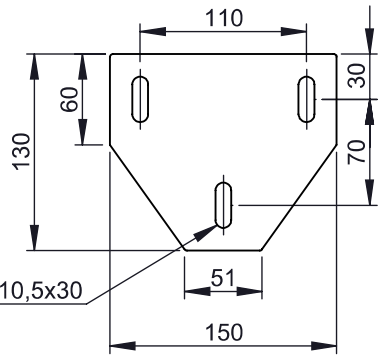

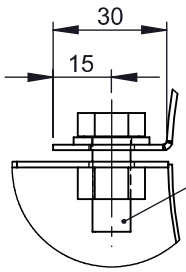

A (1 : 2)

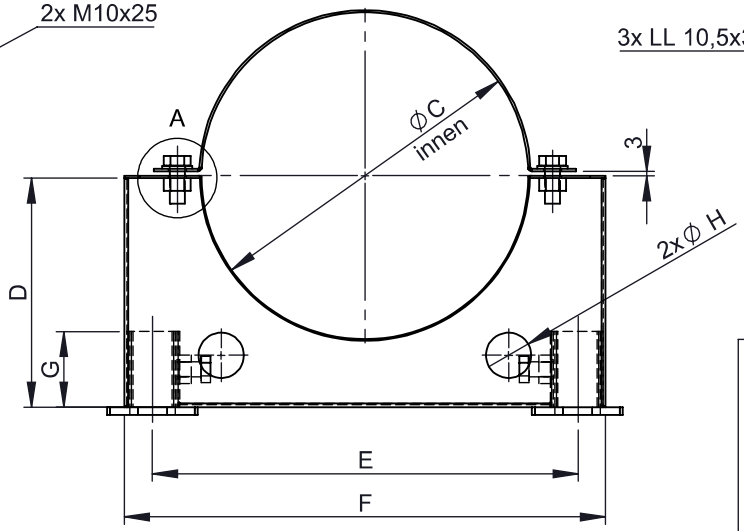

M 1:14 (Ø450)

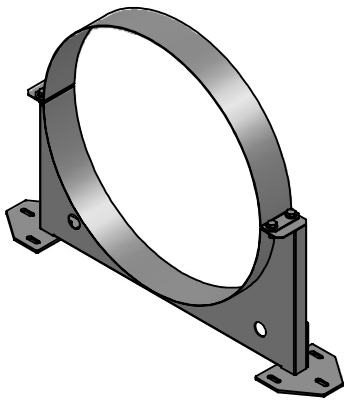

Beispiel für mögliche Materiallösungen	
WGR	**MAT**
2B2	1.4301(304)-2B(IIIC)
2R2	1.4301(304)-2R(IIID)
2J2	1.4301(304)-2J(GEB)FO

Ø	**200**				**225**			**250**					**300**	
C	266				291			316					366	
D	177				189			202					227	
E	330				355			380					430	
F	365				390			415					465	
G	100													
H	30													
kg	3				3,2			3,3					3,5	

Ø	**350**		**400**		**450**		**500**		**550**		**600**
C	416		466		516		566		616		666
D	252		277		302		327		352		377
E	480		530		580		630		680		730
F	515		565		615		665		715		765
G	100										
H	30										
kg	3,8		4		4,3		5,1		5,4		5,7

notes:

DIN ISO 13920 Tolerances B

revisions-no. A3 | mm / kg

	date	name
drawn by	07.09.2018	FBA
checked by		
approved by		
modified by	16.01.2026	NMA

jeremias CHIMNEY SYSTEMS

description: Wandhalter statisch, starr, Wandabstand 50-100mm (Typ AS)
passend für Isolierstärke 32,5 mm

code: **DW45 / DWV45**

drawing-no.: **01-07-06-0250-000**

scale: 1:5

format: A4

sheet: 1 of 1

© jeremias GmbH. All rights reserved, also regarding any disposal, exploitation, editing, distribution, as well as in the event of applications for industrial property rights.