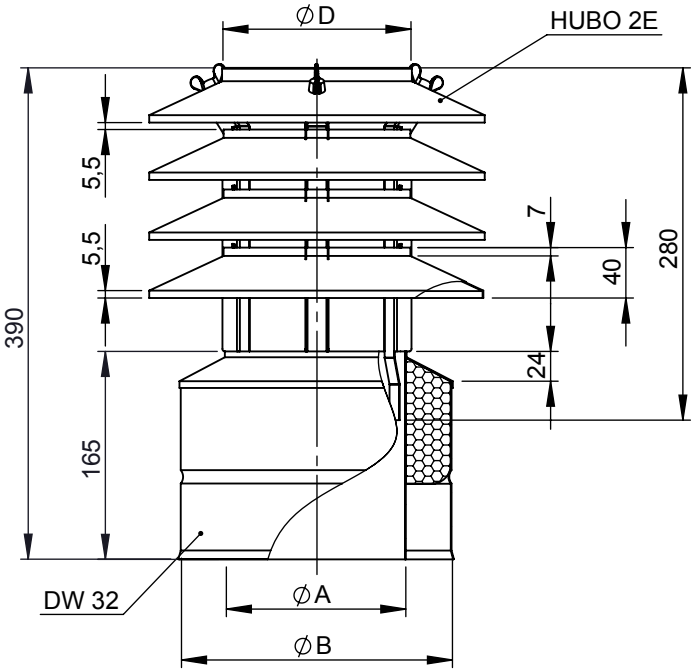

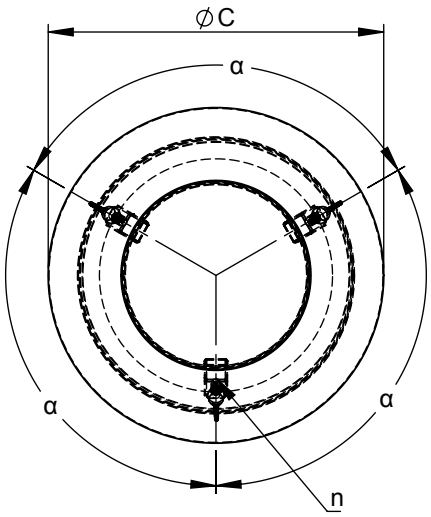

M 1:8 (Ø150)

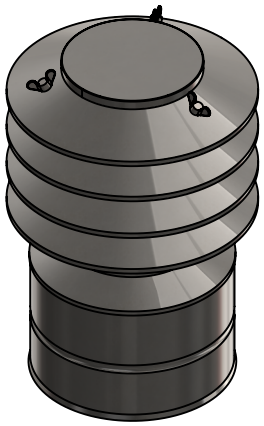

Ø	0080	0100	0115	0120	0130	0140	0150	0160	0180	0200	0225	0250	0300	0350	0400	0450	0500	0550	0600
A	75	95	110	115	125	135	145	155	175	195	220	245	295	345	395	445	495	545	595
B	145	165	180	185	195	205	215	225	245	265	290	315	365	415	465	515	565	615	665
C	195	215	230	235	245	255	265	275	295	315	375	365	415	465	515	565	615	665	715
D	95	115	130	135	145	155	165	175	195	215	240	265	315	365	415	465	515	565	615
n	4																5		6
α	120°																72°		60°
t_i/t_a	0,6 / 0,6																		
kg	3,25	3,76	3,98	4,21	4,30	4,56	5,12	5,92	6,47	7,15	7,62	7,85	9,25	10,72	12,16	13,62	15,21	16,00	18,21

material: inside/outside — 1.4404/1.4301 (316L/304)

surface: inside/outside — 2B/2R (3C/3D)

DIN ISO 13920 Tolerances B

revisions-no. A2

mm / kg

jeremias® CHIMNEY SYSTEMS

scale 1:6

format A4

sheet 1 of 1

notes:

	date	name
drawn by	28.04.2016	KAB
checked by	12.05.2016	RS
approved by		
modified by	27.02.2017	KAB

description: Muendungsabschluss mit Hubo 2e

code: **DW-FU 337**

drawing-no.: **02-20-5056-000**

© jeremias GmbH. All rights reserved, also regarding any disposal, exploitation, editing, distribution, as well as in the event of applications for industrial property rights.