| Pos-Nr. | Name | Item number | QTY |
|---|---|---|---|
| 1 | Collar | WGR-ZUAC31 ∅ | 1 |
| 2 | Flashing kit 16-25° lead base | WGR-ZUAC2937I ∅ | 1 |

| Possible material solutions ZUAC31 | |
|---|---|
| **WGR** | **MAT** |
| **2R2** | 1.4301(304)-2R(IIID) |
| **2B2** | 1.4301(304)-2B(IIIC) |
| **2J2** | 1.4301(304)-2J(GEB)FO |
| **CU** | 2.0090 (SFCU) |

| Possible material solutions ZUAC2937I | | |
|---|---|---|
| **WGR** | **Cone MAT** | **Plate MAT** |
| **2R2** | 1.4301(304)-2R(IIID) | 2.3202(Pb(Sb)) |
| **2B2** | 1.4301(304)-2B(IIIC) | |
| **2J2** | 1.4301(304)-2J(GEB)FO | |
| **VZ** | 1.0226(DX51D)-VZ(VZ) | |

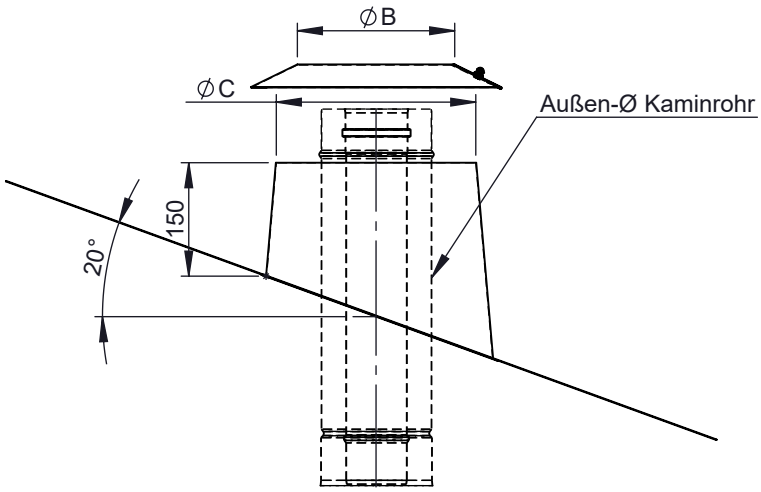


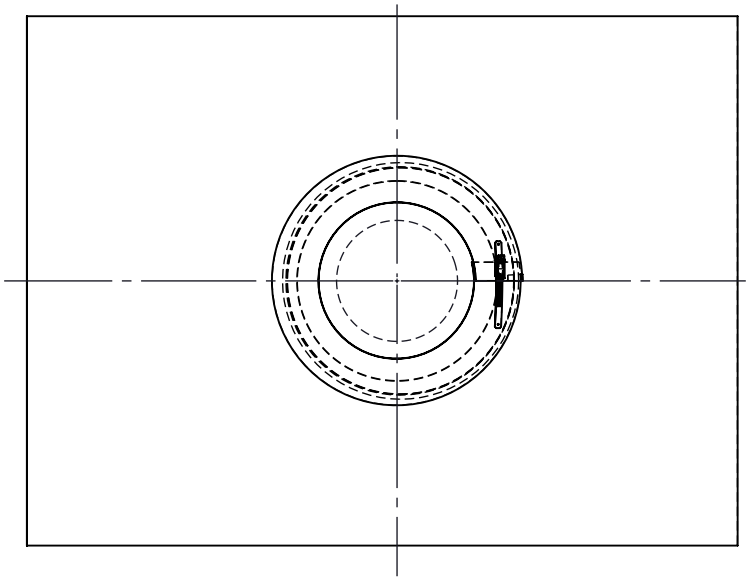

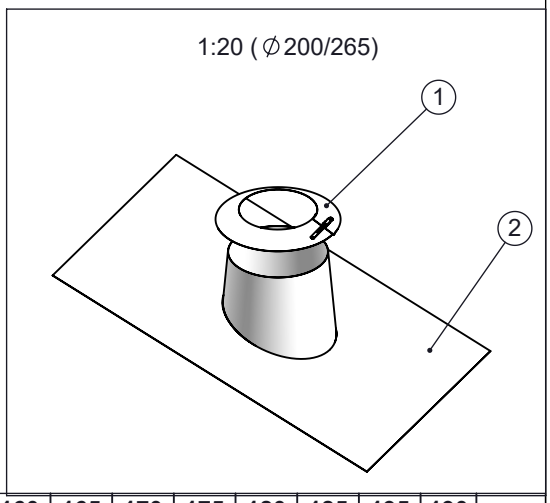


| ∅ | 060 /115 | 065 /115 | 080 /140 | 095 /140 | 100 /165 | 110 /165 | 115 /165 | 120 /165 | 125 /190 | 130 /190 | 140 /190 | 145 /190 | 150 /215 | 160 /215 | 165 /215 | 170 /215 | 175 /240 | 180 /240 | 185 /240 | 195 /240 | 190 /240 |
|---|---|---|---|---|---|---|---|---|---|---|---|---|---|---|---|---|---|---|---|---|---|
| **∅B** | 60 | 65 | 80 | 95 | 100 | 110 | 115 | 120 | 125 | 130 | 140 | 145 | 150 | 160 | 165 | 170 | 175 | 180 | 185 | 195 | 190 |
| **∅C** | 115 | | 140 | | 165 | | | | 190 | | | | 215 | | | | 240 | | | | |
| **kg** | 5,2 | | 5,5 | | 5,7 | | | | 6 | | | | 6,2 | | | | 6,5 | | | | |

| ∅ | 200 /265 | 205 /265 | 210 /265 | 215 /265 | 220 /265 | 225 /290 | 230 /290 | 235 /290 | 240 /290 | 245 /290 | 250 /315 | 255 /315 | 260 /315 | 265 /315 | 275 /340 | 280 /340 | 285 /340 | 290 /340 | 295 /340 | 300 /365 | 315 /365 | 320 /365 |
|---|---|---|---|---|---|---|---|---|---|---|---|---|---|---|---|---|---|---|---|---|---|---|
| **∅B** | 200 | 205 | 210 | 215 | 220 | 225 | 230 | 235 | 240 | 245 | 250 | 255 | 260 | 265 | 275 | 280 | 285 | 290 | 295 | 300 | 315 | 320 |
| **∅C** | 265 | | | | | 290 | | | | | 315 | | | | 340 | | | | | 365 | | |
| **kg** | 6,7 | | | | | 6,9 | | | | | 7,1 | | | | 7,4 | | | | | 7,6 | | |

| ∅ | 325 /390 | 345 /390 | 350 /415 | 360 /415 | 365 /415 | 400 /465 | 415 /465 | 450 /515 | 465 /515 | 480 /540 | 500 /565 | 515 /565 | 550 /615 | 560 /615 | 565 /615 | 600 /665 | 615 /665 | 635 /690 | 650 /715 | 665 /715 | 700 /765 | 715 /765 |
|---|---|---|---|---|---|---|---|---|---|---|---|---|---|---|---|---|---|---|---|---|---|---|
| **∅B** | 325 | 345 | 350 | 360 | 365 | 400 | 415 | 450 | 465 | 480 | 500 | 515 | 550 | 560 | 565 | 600 | 615 | 635 | 650 | 665 | 700 | 715 |
| **∅C** | 390 | | 415 | | | 465 | | 515 | | 540 | 565 | | 615 | | | 665 | | 690 | 715 | | 765 | |
| **kg** | 7,8 | | 8 | | | 8,4 | | 9,5 | | 9,7 | 9,8 | | 10,7 | | | 11,6 | | 12 | 12,5 | | 13,4 | |

notes:
JCD

DIN ISO 13920 Tolerances B

revisions-no. A

mm / kg

| | date | name |
|---|---|---|
| drawn by | 18.12.23 | HSA |
| checked by | | |
| approved by | | |
| modified by | | |

jeremias® CHIMNEY SYSTEMS

description: Flashing kit 16-25° with lead plate, incl. storm collar

code: **WGR-ZUAC2937 ∅**

drawing-no.: **01-07-04-5302-000**

scale: 1:10

format: A4

sheet: 1 of 1

© jeremias GmbH. All rights reserved, also regarding any disposal, exploitation, editing, distribution, as well as in the event of applications for industrial property rights.