Pos-Nr.	Name	Item number	QTY
1	Collar	WGR-ZUAC31 ∅B	1
2	Flashing kit 36-45° with lead plate	WGR-ZUAC2936I ∅C	1

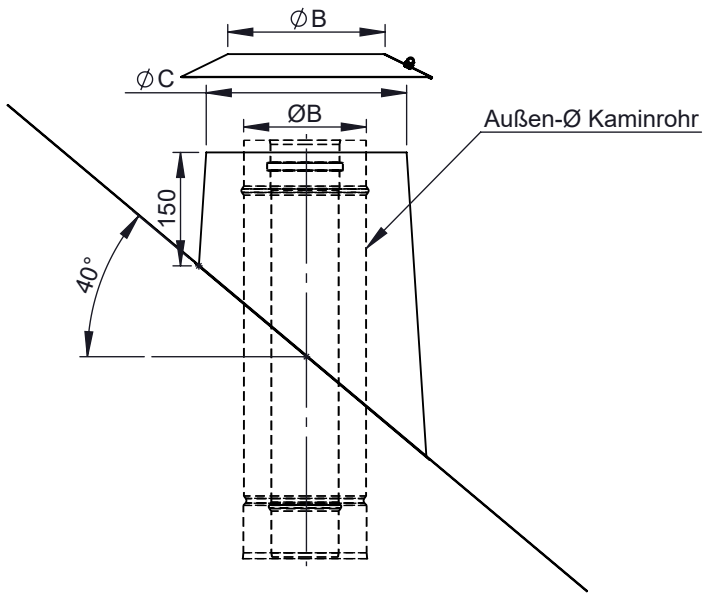

Possible material solutions ZUAC31	
WGR	**MAT**
2R2	1.4301(304)-2R(IIID)
2B2	1.4301(304)-2B(IIIC)
2J2	1.4301(304)-2J(GEB)FO
CU	2.0090 (SFCU)

Possible material solutions ZUAC2936I		
WGR	**Cone MAT**	**Plate MAT**
2R2	1.4301(304)-2R(IIID)	2.3202(Pb(Sb))
2B2	1.4301(304)-2B(IIIC)	
2J2	1.4301(304)-2J(GEB)FO	
VZ	1.0226(DX51D)-VZ(VZ)	

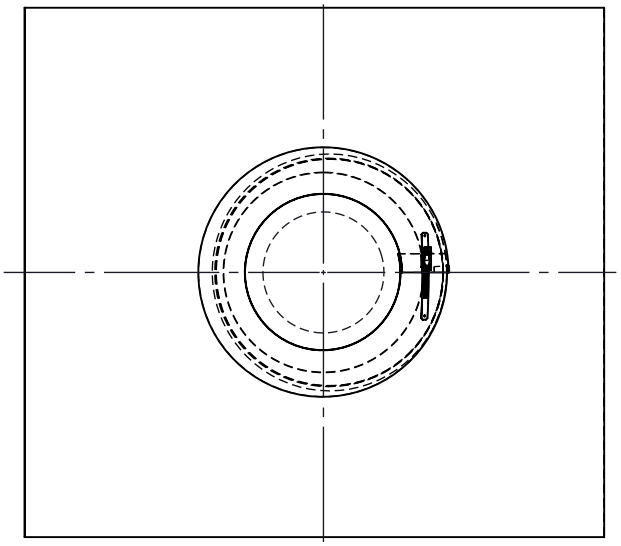

1:20 (∅200/265)

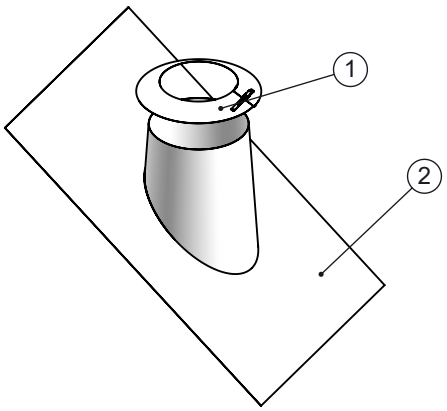

∅	060 /115	065 /115	080 /140	095 /140	100 /165	110 /165	115 /165	120 /165	125 /190	130 /190	140 /190	145 /190	150 /215	160 /215	165 /215	170 /215	175 /240	180 /240	185 /240	195 /240	190 /240
∅B	60	65	80	95	100	110	115	120	125	130	140	145	150	160	165	170	175	180	185	195	190
∅C	115		140		165				190				215				240				
kg	5,22	5,23	5,5	5,51	5,77	5,78	5,78	5,79	6,04	6,04	6,05	6,06	6,31	6,32	6,32	6,33	6,57	6,58	6,58	6,59	6,59

∅	200 /265	205 /265	210 /265	215 /265	220 /265	225 /290	230 /290	235 /290	240 /290	245 /290	250 /315	255 /315	260 /315	265 /315	275 /340	280 /340	285 /340	290 /340	295 /340	300 /365	315 /365	320 /365
∅B	200	205	210	215	220	225	230	235	240	245	250	255	260	265	275	280	285	290	295	300	315	320
∅C	265					290					315				340					365		
kg	6,83	6,84	6,84	6,85	6,85	7,09	7,09	7,1	7,1	7,11	7,34	7,35	7,35	7,36	7,59	7,6	7,6	7,61	7,61	7,84	7,85	7,86

∅	325 /390	345 /390	350 /415	360 /415	365 /415	400 /465	415 /465	450 /515	465 /515	480 /540	500 /565	515 /565	550 /615	560 /615	565 /615	600 /665	615 /665	635 /690	650 /715	665 /715	700 /765	715 /765
∅B	325	345	350	360	365	400	415	450	465	480	500	515	550	560	565	600	615	635	650	665	700	715
∅C	390		415			465		515		540	565		615			665		690	715		765	
kg	9,67	9,69	9,98	10	10	10,6	10,6	11,2	11,2	11,5	11,7	11,8	12,9	12,9	12,9	14,1	14,1	14,7	15,3	15,3	16,5	16,6

notes:
JCD

DIN ISO 13920 Tolerances B

revisions-no. A

mm / kg

	date	name
drawn by	14.12.23	HSA
checked by		
approved by		
modified by		

jeremias® CHIMNEY SYSTEMS

description: Flashing kit 36-45° with lead plate, incl. storm collar

code: **WGR-ZUAC2936 ∅**

drawing-no.: **01-07-04-5306-000**

scale: 1:10

format: A4

sheet: 1 of 1

© jeremias GmbH. All rights reserved, also regarding any disposal, exploitation, editing, distribution, as well as in the event of applications for industrial property rights.