Pos-Nr.	Name	Item number	QTY
1	Collar	WGR-ZUAC31∅B	1
2	Flashing kit 5-15° lead base	WGR-ZUAC2935I∅C	1

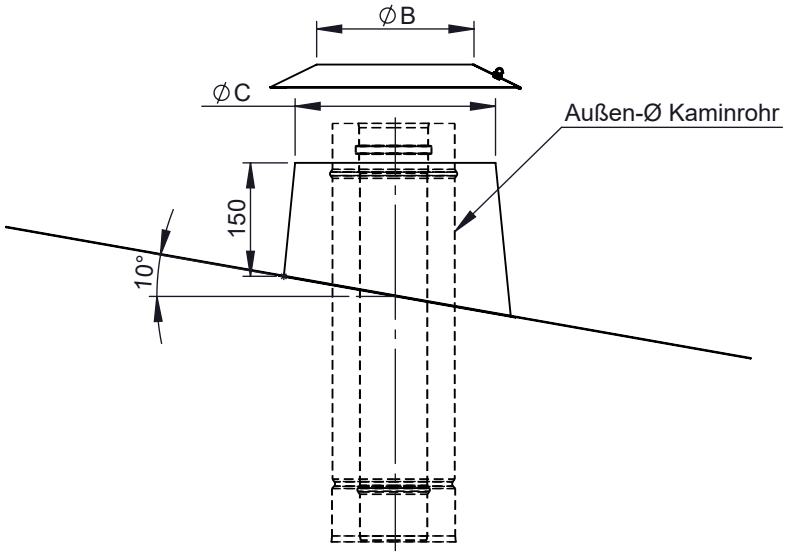

Possible material solutions ZUAC31	
WGR	**MAT**
2R2	1.4301(304)-2R(IIID)
2B2	1.4301(304)-2B(IIIC)
2J2	1.4301(304)-2J(GEB)FO
CU	2.0090 (SFCU)

Possible material solutions ZUAC2935I		
WGR	**Cone MAT**	**Plate MAT**
2R2	1.4301(304)-2R(IIID)	2.3202(Pb(Sb))
2B2	1.4301(304)-2B(IIIC)	
2J2	1.4301(304)-2J(GEB)FO	
VZ	1.0226(DX51D)-VZ(VZ)	

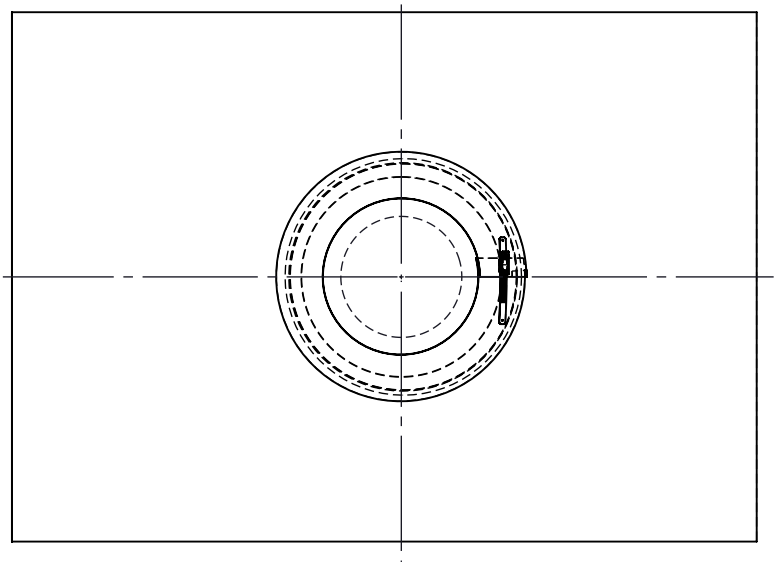

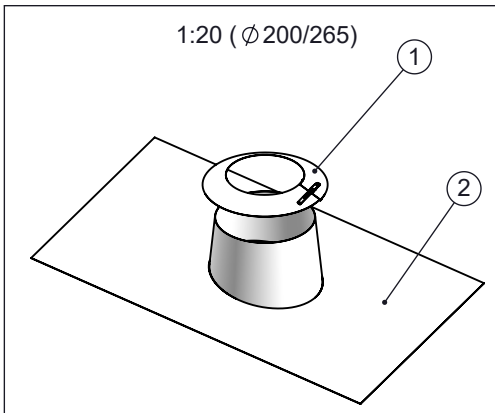

∅	060 /115	065 /115	080 /140	095 /140	100 /165	110 /165	115 /165	120 /165	125 /190	130 /190	140 /190	145 /190	150 /215	160 /215	165 /215	170 /215	175 /240	180 /240	185 /240	195 /240	190 /240
∅B	60	65	80	95	100	110	115	120	125	130	140	145	150	160	165	170	175	180	185	195	190
∅C	115		140		165				190				215				240				
kg	5,2		5,4		5,7				5,9				6,2				6,4				

∅	200 /265	205 /265	210 /265	215 /265	220 /265	225 /290	230 /290	235 /290	240 /290	245 /290	250 /315	255 /315	260 /315	265 /315	275 /340	280 /340	285 /340	290 /340	295 /340	300 /365	315 /365	320 /365
∅B	200	205	210	215	220	225	230	235	240	245	250	255	260	265	275	280	285	290	295	300	315	320
∅C	265					290					315				340					365		
kg	6,6					6,8					7				7,2					7,4		

∅	325 /390	345 /390	350 /415	360 /415	365 /415	400 /465	415 /465	450 /515	465 /515	480 /540	500 /565	515 /565	550 /615	560 /615	565 /615	600 /665	615 /665	635 /690	650 /715	665 /715	700 /765	715 /765
∅B	325	345	350	360	365	400	415	450	465	480	500	515	550	560	565	600	615	635	650	665	700	715
∅C	390		415			465		515		540	565		615			665		690	715		765	
kg	7,6		7,8			8,1		8,9		9,1	9,2		10			10,7		11,1	11,5		12,3	

notes:
JCD

DIN ISO 13920 Tolerances B

revisions-no. A

mm / kg

	date	name
drawn by	15.12.23	HSA
checked by		
approved by		
modified by		

jeremias® CHIMNEY SYSTEMS

description: Flashing kit 5-15° with lead plate, incl. storm collar

code: **WGR-ZUAC2935∅**

drawing-no.: **01-07-04-5300-000**

scale: 1:10

format: A4

sheet: 1 of 1

© jeremias GmbH. All rights reserved, also regarding any disposal, exploitation, editing, distribution, as well as in the event of applications for industrial property rights.