

A (1 : 2)

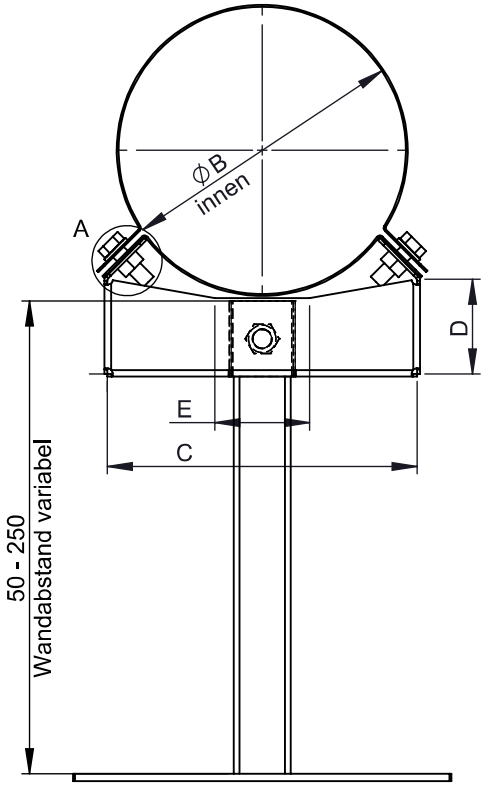

M 1:5 (Ø150)

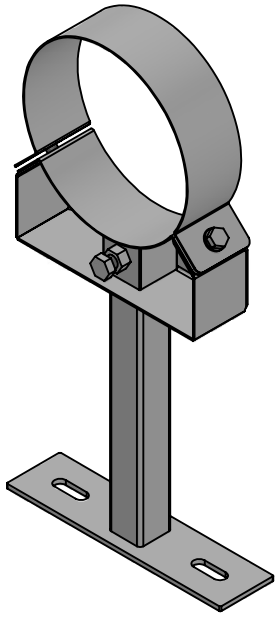

Beispiel für mögliche Materiallösungen	
WGR	**MAT**
2R2	1.4301(304)-2R(IIID)
2B2	1.4301(304)-2B(IIIC)
2J2	1.4301(304)-2J(GEB)FO

Ø											**80**			**100**		**110**	**115**	**120**	**125**	**130**		
B											146			166		176	181	186	191	196		
C											164								195			
D											50								61			
E											50											
F											50											
G	200																					
H	130																					
kg											1,38		1,4		1,41		1,42	1,43	1,49		1,5	

Ø	**140**			**150**			**160**				**180**				**200**					**225**			
B	206			216			226				246				266					291			
C	195			210							225				255								
D	61										62				75								
E	50																						
F	50																						
G	200																						
H	130																						
kg	1,51			1,54			1,55						1,6				1,69				1,72		

notes:

DIN ISO 13920 Tolerances B

revisions-no. A1 | mm / kg

	date	name
drawn by	19.03.2021	KSA
checked by		
approved by		
modified by	04.08.2025	MNA

jeremias® CHIMNEY SYSTEMS

description: Wandhalter verstellbar, Wandabstand 50-250mm passend für Isolierstärke 32,5mm

code: **DW23 / DWV23**

drawing-no.: **01-02-20-0219-000**

scale: 1:4

format: A4

sheet: 1 of 1

© jeremias GmbH. All rights reserved, also regarding any disposal, exploitation, editing, distribution, as well as in the event of applications for industrial property rights.

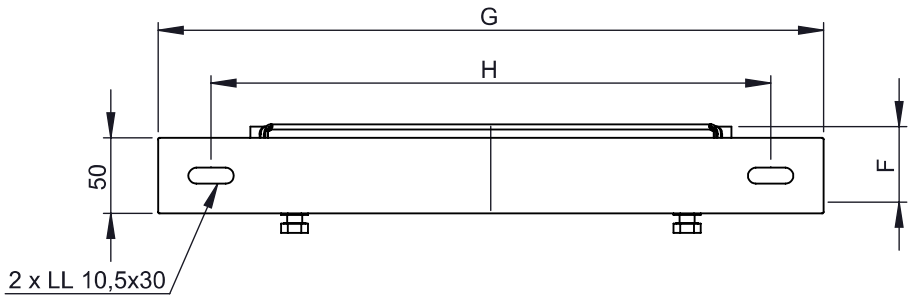

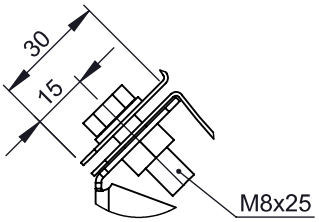

B (1 : 2)

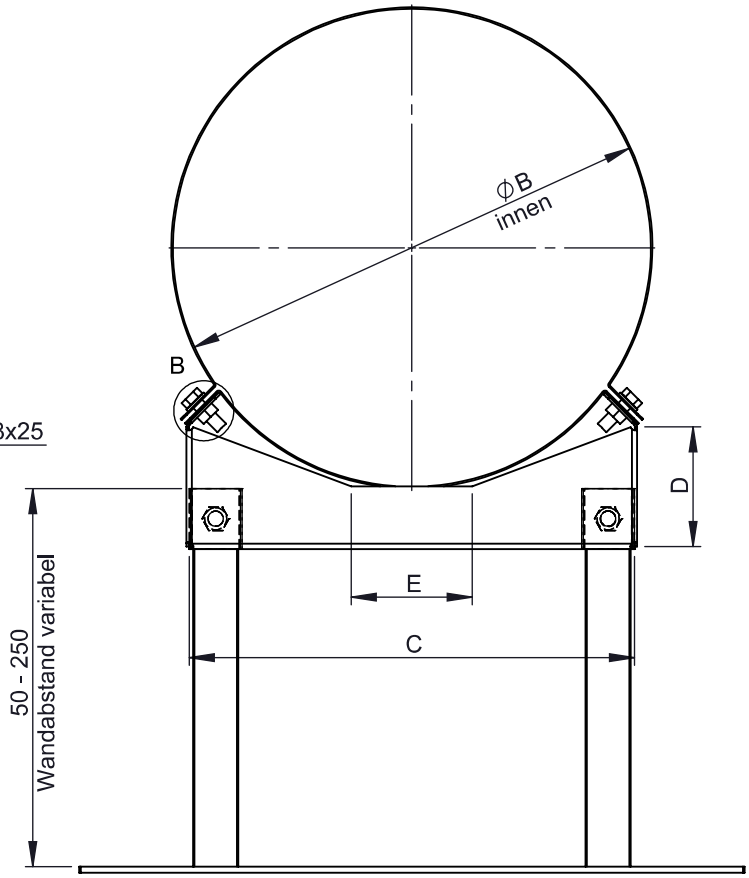

M 1:8 (Ø315)

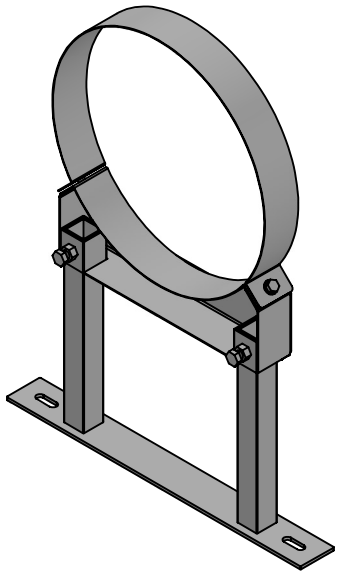

Beispiel für mögliche Materiallösungen	
WGR	**MAT**
2R2	1.4301(304)-2R(IIID)
2B2	1.4301(304)-2B(IIIC)
2J2	1.4301(304)-2J(GEB)FO

Ø	250	300	350	400	450	500	550	600
B	316	366	416	466	516	566	616	666
C	295	328		417		480		635
D	80	87		115		128		199
E	80			150		140		240
F	50							
G	440	470		550		615		770
H	370	400		480		545		700
kg	2,73	2,9	2,96	3,33	3,39	3,69	3,76	4,51

notes:

DIN ISO 13920 Tolerances B

revisions-no. A1 | mm / kg

	date	name
drawn by	19.03.2021	KSA
checked by		
approved by		
modified by	04.08.2025	MNA

jeremias® CHIMNEY SYSTEMS

description: Wandhalter verstellbar, Wandabstand 50-250mm passend für Isolierstärke 32,5 mm

code: **DW23 / DWV23**

drawing-no.: **01-02-20-0219-000**

scale: 1:5

format: A4

sheet: 1 of 1

© jeremias GmbH. All rights reserved, also regarding any disposal, exploitation, editing, distribution, as well as in the event of applications for industrial property rights.