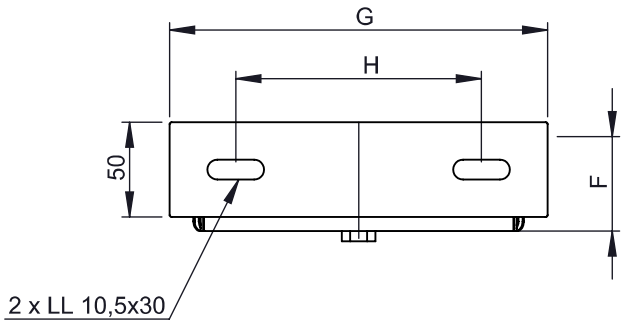

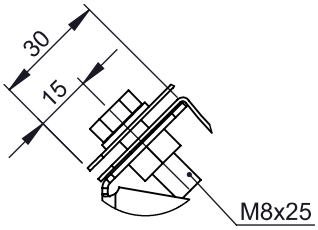

A (1 : 2)

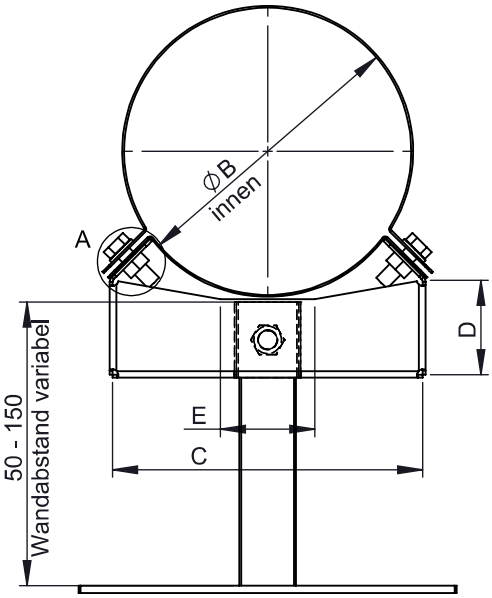

M 1:5 (Ø150)

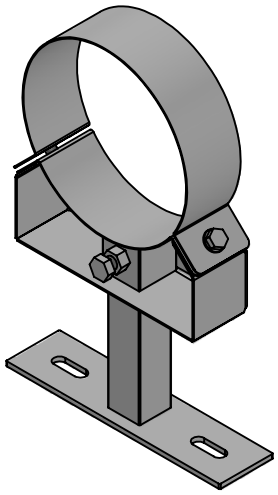

Beispiel für mögliche Materiallösungen	
WGR	MAT
	1.4301(304)-2R(IIID)
	1.4301(304)-2B(IIIC)
	1.4301(304)-2J(GEB)FO

Ø	80	100	110	115	120	125	130
B	146	166	176	181	186	191	196
C	164					195	
D	50					61	
E	50						
F	50						
G	200						
H	130						
kg	1,2	1,22	1,24	1,25	1,31	1,32	

Ø	140	150	160	180	200	225
B	206	216	226	246	266	291
C	195	210		225	255	
D	61			62	75	
E	50					
F	50					
G	200					
H	130					
kg	1,33	1,36	1,37	1,42	1,51	1,54

notes:

DIN ISO 13920 Tolerances B

revisions-no. A11 | mm / kg

	date	name
drawn by	17.03.2021	KSA
checked by		
approved by		
modified by	09.10.2025	USC

jeremias® CHIMNEY SYSTEMS

description: Wandhalter verstellbar, Wandabstand 50-150mm passend für Isolierstärke 32,5mm

code: **DW22 / DWV22**

drawing-no.: **01-02-20-0214-000**

scale: 1:4

format: A4

sheet: 1 of 2

© jeremias GmbH. All rights reserved, also regarding any disposal, exploitation, editing, distribution, as well as in the event of applications for industrial property rights.

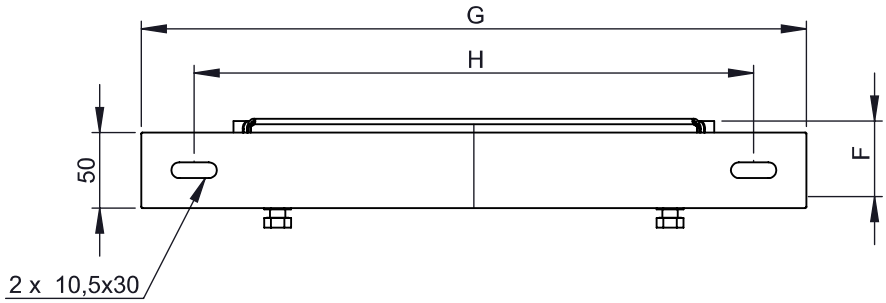

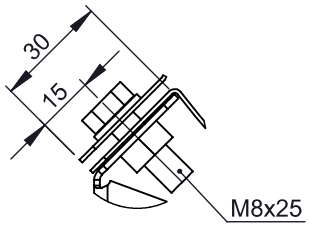

B (1 : 2)

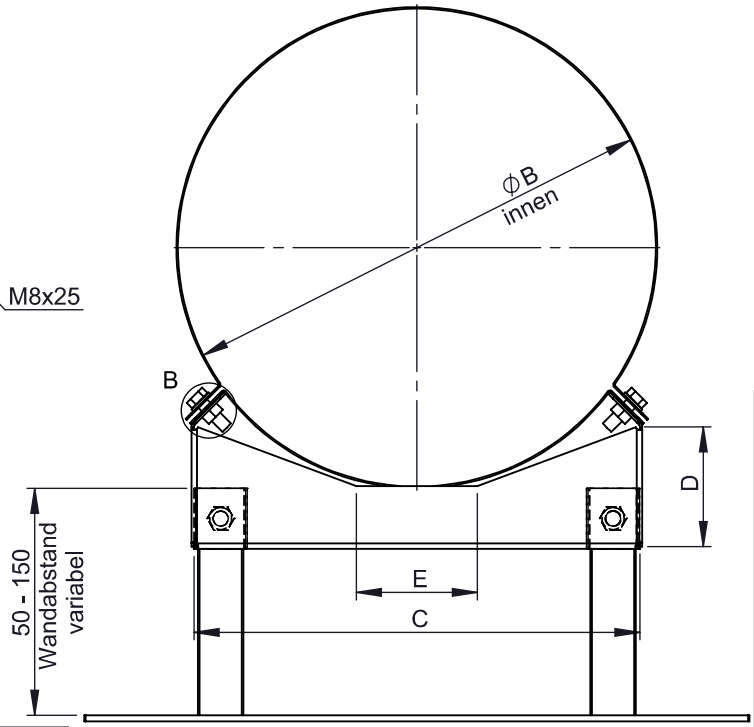

M 1:8 (Ø315)

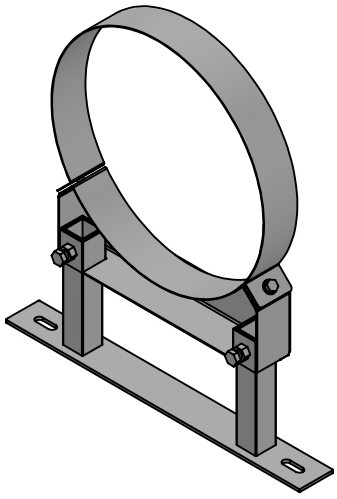

Beispiel für mögliche Materiallösungen	
WGR	**MAT**
	1.4301(304)-2R(IIID)
	1.4301(304)-2B(IIIC)
	1.4301(304)-2J(GEB)FO

Ø	250	300	350	400	450	500	550	600
B	316	366	416	466	516	566	616	666
C	295	328		417		480		635
D	80	87		115		128		199
E	80			150		140		240
F	50							
G	440	470		550		615		770
H	370	400		480		545		700
kg	2,37	2,54	2,61	2,97	3,03	3,34	3,4	4,16

notes:

DIN ISO 13920 Tolerances B

revisions-no. A11 | mm / kg

	date	name
drawn by	17.03.2021	KSA
checked by		
approved by		
modified by	09.10.2025	USC

jeremias® CHIMNEY SYSTEMS

description: Wandhalter verstellbar, Wandabstand 50-150mm

code: **DW22 / DWV22**

drawing-no.: **01-02-20-0214-000**

scale: 1:5

format: A4

sheet: 2 of 2

© jeremias GmbH. All rights reserved, also regarding any disposal, exploitation, editing, distribution, as well as in the event of applications for industrial property rights.