

A (1 : 2)

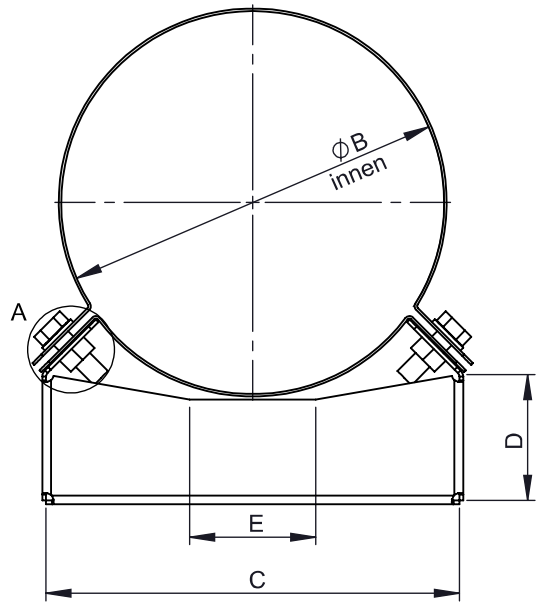

M 1:5 (Ø150)

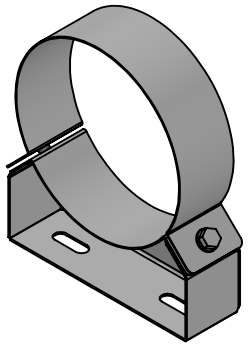

Beispiel für mögliche Materiallösungen	
WGR	**MAT**
	1.4301(304)-2R(IIID)
330	1.4301(304)-2B(IIIC)
	1.4301(304)-2J(GEB)FO

Ø							**060**			**080**			**100**		**110**	**115**	**120**	**125**	**130**	
B							126			146			166		176	181	186	191	196	
C		114								164								195		
D		43								50								61		
E		40								50										
F	35									50										
G		60								100								120		
kg						0,34				0,54		0,56		0,57		0,58	0,59	0,65	0,66	

Ø	**140**		**150**		**160**				**180**				**200**				**225**			
B	206		216		226				246				266				291			
C	195		210						225				255							
D	61								62				75							
E	50																			
F	50																			
G	120		135						150				180							
kg	0,67		0,7		0,71				0,76				0,85				0,88			

Ø	**250**						**300**		**350**		**400**			**450**			**500**		**550**			**600**
B	316						366		416		466			516			566		616			666
C	295						328				417						480					635
D	80						87				115						128					199
E	80										150						140					240
F	50																					
G	215						250				339						380					535
kg	0,97						1,09		1,15		1,39			1,46			1,66		1,72			2,23

notes:

DIN ISO 13920 Tolerances B

revisions-no. A1 | mm / kg

	date	name
drawn by	17.03.2021	KSA
checked by		
approved by		
modified by	03.06.2025	USC

jeremias® CHIMNEY SYSTEMS

description: Wandhalter starr, Wandabstand 50mm (Typ A) passend für Isolierstärke 32,5mm

code: **DW21 / DWV21 Ø**

drawing-no.: **01-07-04-0200-000**

scale: 1:3

format: A4

sheet: 1 of 1

© jeremias GmbH. All rights reserved, also regarding any disposal, exploitation, editing, distribution, as well as in the event of applications for industrial property rights.