

A (1 : 2)

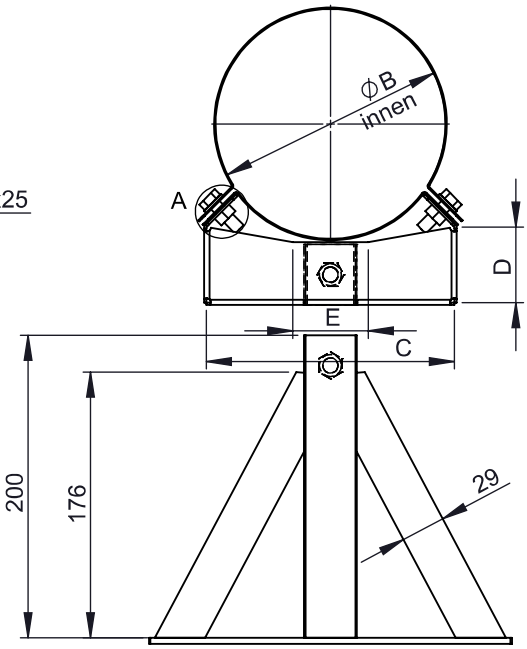

M 1:8 (Ø150)

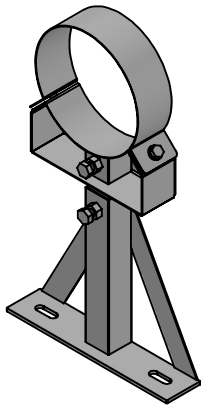

Beispiel für mögliche Materiallösungen	
WGR	**MAT**
340	1.4301(304)-2R(IIID)
330	1.4301(304)-2B(IIIC)
350	1.4301(304)-2J(GEB)FO

Ø	**060**	**080**	**100**	**110**	**115**	**120**	**125**	**130**
B	126	146	166	176	181	186	191	196
C	114	164					195	
D	43	50					61	
E	40	50						
F	35	50						
G	240							
H	170							
kg	1,36	1,56	1,59	1,6	1,61		1,68	

Ø	**140**	**150**	**160**	**180**	**200**	**225**
B	206	216	226	246	266	291
C	195	210		225	255	
D	61			62	75	
E	50					
F	50					
G	240					
H	170					
kg	1,69	1,73	1,74	1,78	1,88	1,91

notes:

DIN ISO 13920 Tolerances B

revisions-no. A1 | mm / kg

	date	name
drawn by	24.03.2021	KSA
checked by		
approved by		
modified by	27.05.2025	USC

jeremias® CHIMNEY SYSTEMS

description: Wand- und Kopfteil für Wandhalter, Wandabstand ab 250mm passend für Isolierstärke 32,5mm

code: **DW20 / DWV20**

drawing-no.: **01-07-04-0210-000**

scale: 1:5

format: A4

sheet: 1 of 2

© jeremias GmbH. All rights reserved, also regarding any disposal, exploitation, editing, distribution, as well as in the event of applications for industrial property rights.

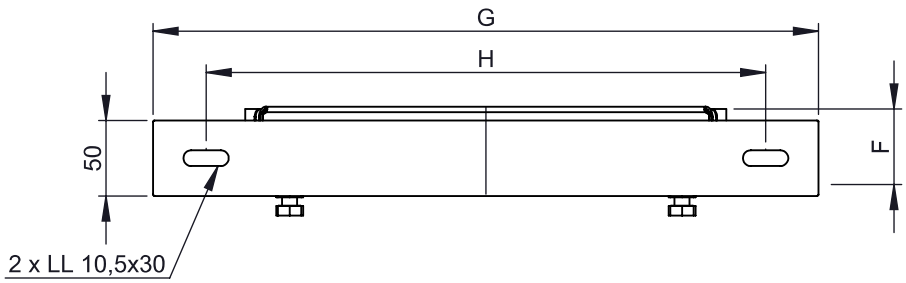

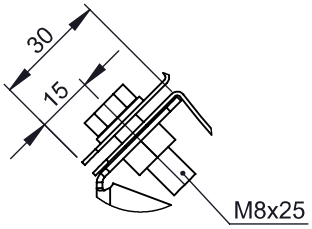

B (1 : 2)

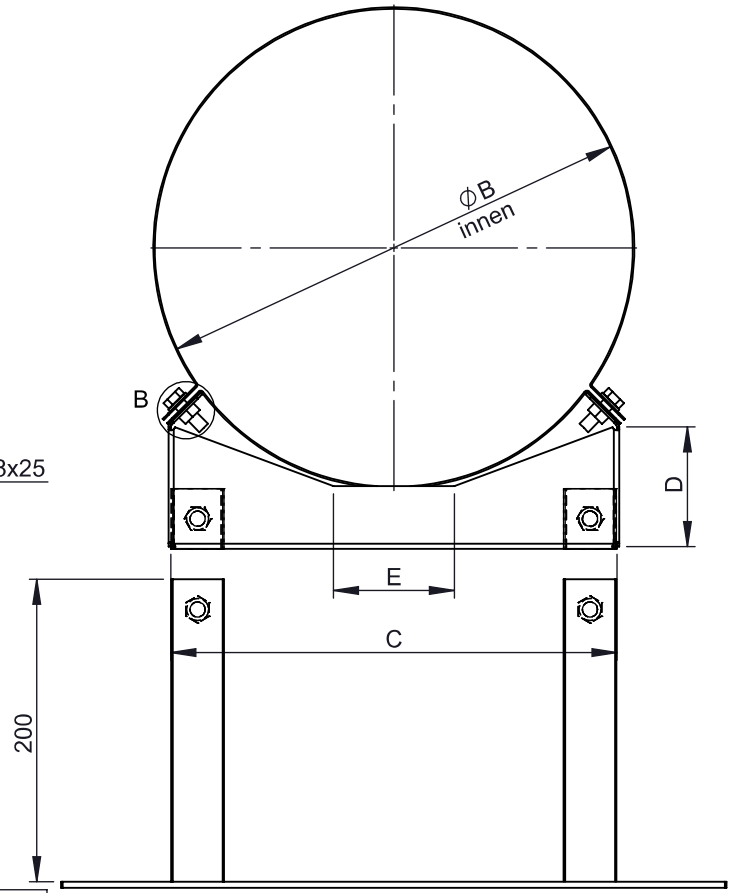

M 1:8 (Ø315)

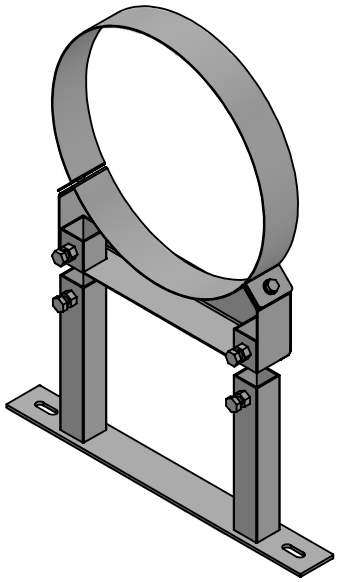

Beispiel für mögliche Materiallösungen	
WGR	**MAT**
340	1.4301(304)-2R(IIID)
330	1.4301(304)-2B(IIIC)
350	1.4301(304)-2J(GEB)FO

Ø	250						300		350		400			450			500		550			600
B	316						366		416		466			516			566		616			666
C	295						328				417						480					635
D	80						87				115						128					199
E	80										150						140					240
F	50																					
G	440						470				550						615					770
H	370						400				480						545					700
kg	2,73						2,9		2,96		3,33			3,39			3,7		3,76			4,52

notes:

DIN ISO 13920 Tolerances B

revisions-no. A1 | mm / kg

	date	name
drawn by	24.03.2021	KSA
checked by		
approved by		
modified by	27.05.2025	USC

jeremias® CHIMNEY SYSTEMS

description: Wand- und Kopfteil für Wandhalter, Wandabstand ab 250mm passend für Isolierstärke 32,5mm

code: **DW20 / DWV20**

drawing-no.: **01-07-04-0210-000**

scale: 1:5

format: A4

sheet: 2 of 2

© jeremias GmbH. All rights reserved, also regarding any disposal, exploitation, editing, distribution, as well as in the event of applications for industrial property rights.