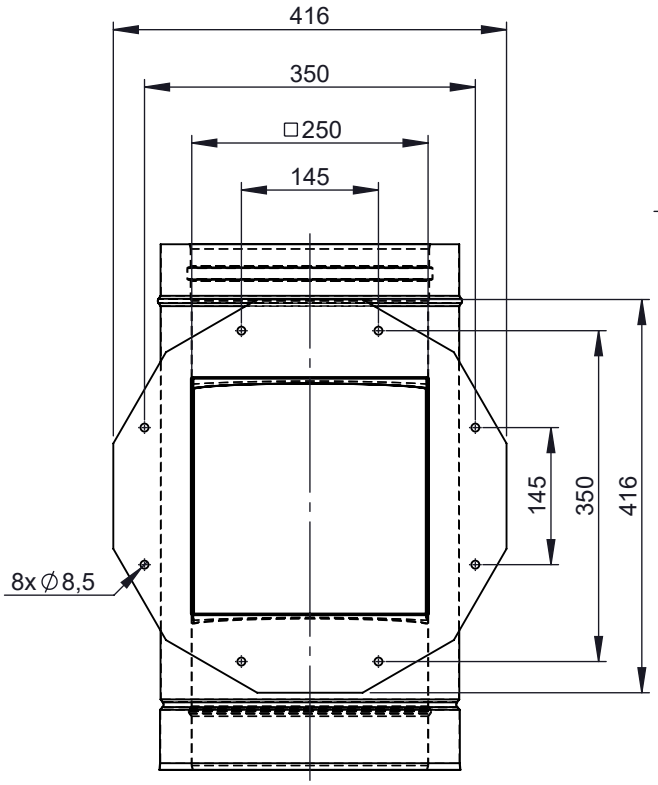

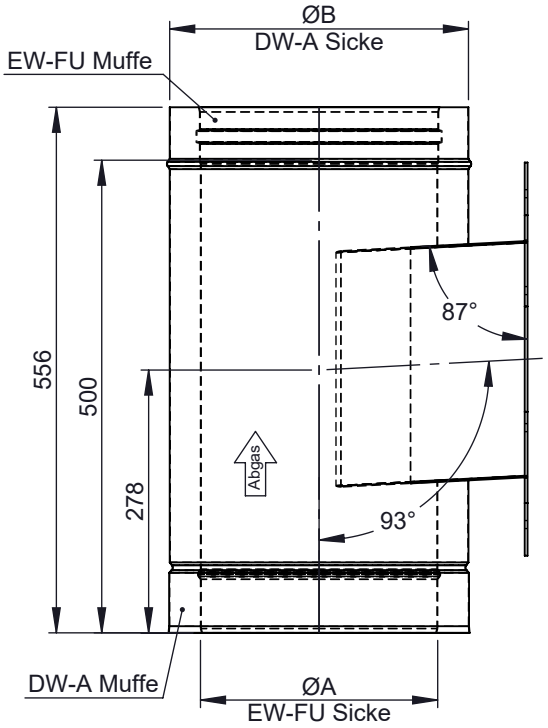

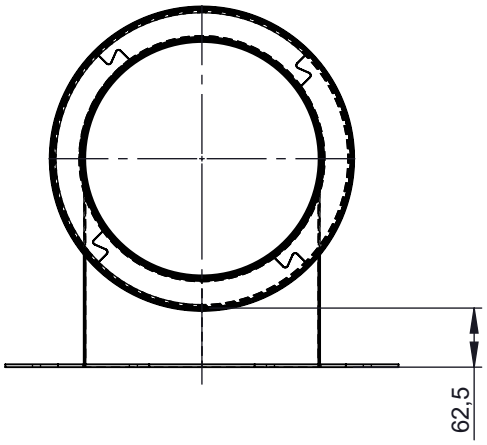

Ausführungsvarianten für Muffe Innenrohr

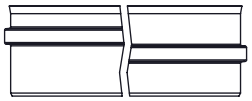

M 1:10 (Ø250)

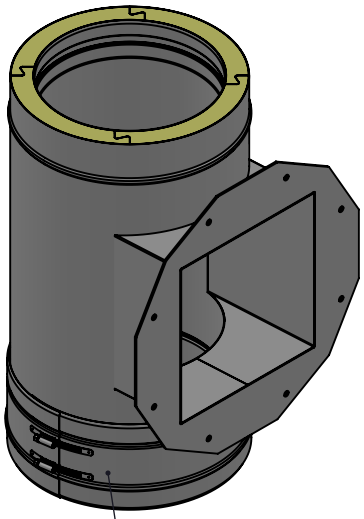

inkl. Systemklemmband

Ø	250	300	350	400	450	500	550	600
A	250	300	350	400	450	500	550	600
B	315	365	415	465	515	565	615	665
kg	9,31	10,64	13	14,48	15,96	17,45	18,93	21,36

notes:

DIN ISO 13920 Tolerances B

revisions-no. A1 | mm / kg

	date	name
drawn by	22.05.2025	API
checked by		
approved by		
modified by		

jeremias® CHIMNEY SYSTEMS

description: Längenelement 560mm mit Zugregleranschluss für ZUK250, inkl. Systemklemmband

code: **DW1756**

drawing-no.: **01-02-20-4308-000**

scale: 1:8

format: A4

sheet: 1 of 1

© jeremias GmbH. All rights reserved, also regarding any disposal, exploitation, editing, distribution, as well as in the event of applications for industrial property rights.