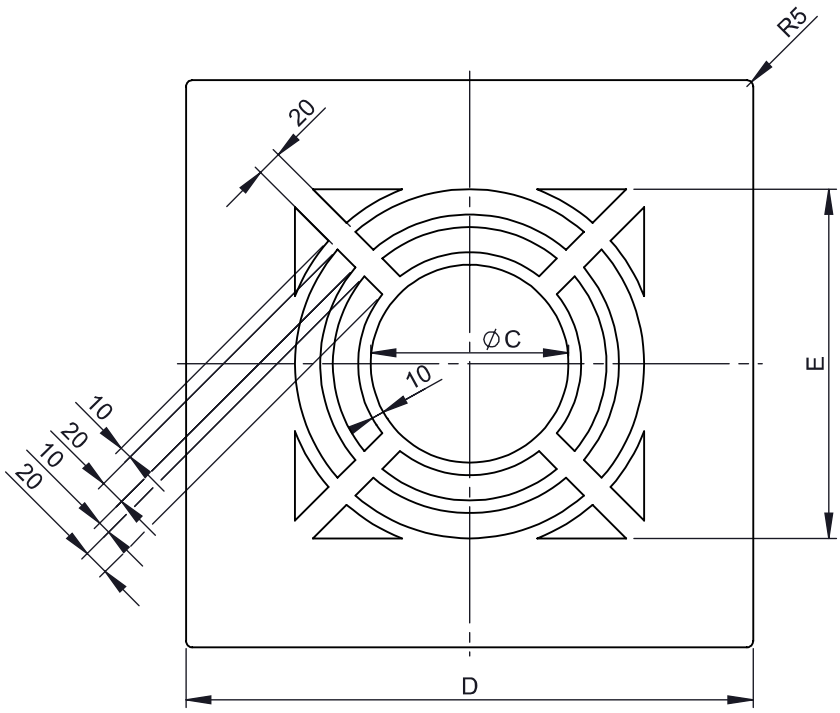

M 1:10 (Ø150)

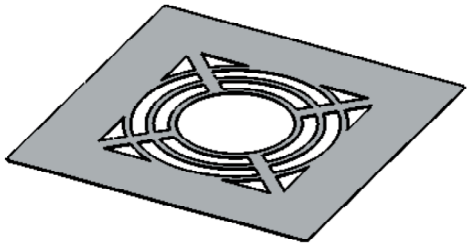

Ø								**80**			**100**	**110**	**115**	**120**	**125**	**130**		**140**		**150**		**160**
C								136			157	166	171	176	181	186		196		206		216
D								430			450	460	465	470	475	480		490		500		510
E								256			277	286	291	296	301	306		316		326		336
kg								0,66			0,72	0,74	0,75	0,76	0,77	0,78		0,8		0,82		0,85
Ø				**180**				**200**				**225**					**250**					**300**
C				236				256				281					306					356
D				530				550				575					600					650
E				356				376				401					426					476
kg				0,89				0,93				0,99					1,06					1,17
Ø			**350**		**400**			**450**		**500**			**550**			**600**		**650**		**700**		**750**
C			406		456			506		556			606			656		706		756		806
D			700		750			800		850			900			950		1000		1050		1100
E			526		576			626		676			726			776		826		876		926
kg			1,3		1,42			1,55		1,67			1,79			1,93		2,06		2,18		2,33
Ø		**800**		**850**		**900**		**950**		**1000**		**1050**		**1100**		**1150**		**1200**		**1250**		
C		856		906		956		1006		1056		1106		1156		1206		1256		1306		
D		1150		1200		1250		1300		1350		1400		1450		1500		1550		1600		
E		976		1026		1076		1126		1176		1226		1276		1326		1376		1426		
kg		2,46		2,59		2,74		2,87		3,03		3,19		3,33		3,47		3,61		3,75		

notes:

DIN ISO 13920 Tolerances B

revisions-no. A

mm / kg

	date	name
drawn by	17.02.2021	TRA
checked by		
approved by		
modified by	21.08.2025	MNA

jeremias CHIMNEY SYSTEMS

description: Deckenblende für Hinterlüftung, passend für Isolierstärke 25 mm

code: **DWECO70HL**

drawing-no.: **01-07-04-5520-000**

scale: 1:6

format: A4

sheet: 1 of 1

© jeremias GmbH. All rights reserved, also regarding any disposal, exploitation, editing, distribution, as well as in the event of applications for industrial property rights.