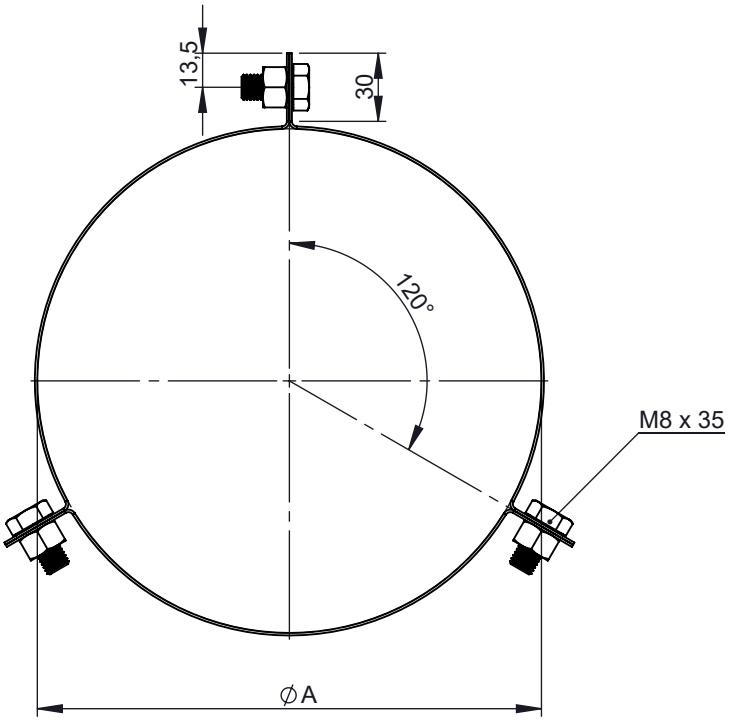

1:5 (0150)

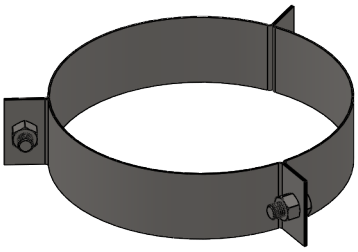

∅	0080	0100	0115	0120	0130	0140	0150	0160	0180	0200	0250	0300	0350	0400	0450	0500	0550	0600
A	130	150	165	170	180	190	200	210	230	250	300	350	400	450	500	550	600	650
kg	0,24	0,27	0,28	0,29	0,3	0,32	0,33	0,34	0,37	0,39	0,45	0,52	0,58	0,64	0,71	0,77	0,83	0,89

notes:
ENCD

DIN ISO 13920 Tolerances B

revisions-no. A

mm / kg

	date	name
drawn by	22.11.19	JMA
checked by	22.11.19	SWA
approved by	22.11.19	JWY
modified by		

jeremias® CHIMNEY SYSTEMS

description: 3 Point guy wire bracket

code: **DWECO42**

drawing-no.: **02-30-0521-000**

scale: 1:5

format: A4

sheet: 1 of 1

© jeremias GmbH. All rights reserved, also regarding any disposal, exploitation, editing, distribution, as well as in the event of applications for industrial property rights.