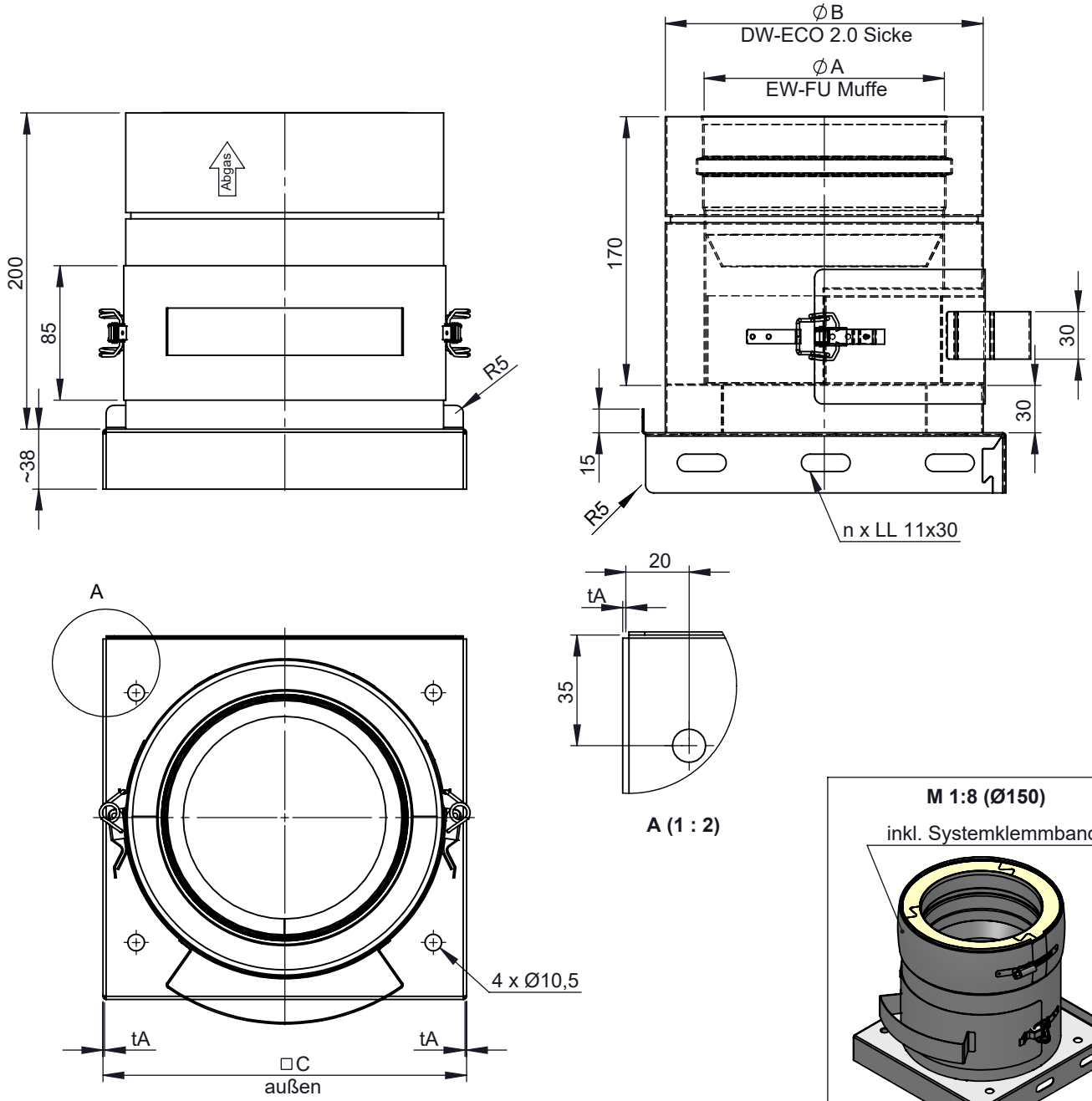

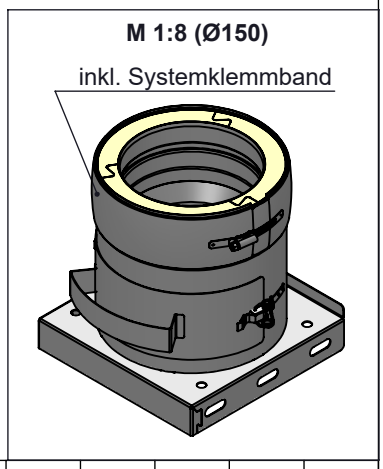

Ø	80	100	115	120	130	150	160	180	200	225	250	300	350	400	450	500	550	600
A	80	100	115	120	130	150	160	180	200	225	250	300	350	400	450	500	550	600
B	130	150	165	170	180	200	210	230	250	275	300	350	400	450	500	550	600	650
C	215				210	230	240	260	280	305	330	380	430	480	530	580	630	680
n	3												5					
tA	1,0									1,5			2,0					
kg	2,4	2,8	3,1	3,2	3,3	3,8	4,0	4,6	5,1	6,2	7,0	8,6	11,2	13,3	15,5	17,9	20,4	23,0

notes:

DIN ISO 13920 Tolerances B

revisions-no. A1 | mm / kg

	date	name
drawn by	27.01.2021	KSA
checked by		
approved by		
modified by	01.03.2021	KSA

jeremias CHIMNEY SYSTEMS

description: Grundplatte mit herausnehmbaren Russtopf inkl. Klemmband

code: 205-DWETN1592

drawing-no.: 01-02-35-1067-205

scale: 1:4

format: A4

sheet: 1 of 1

© jeremias GmbH. All rights reserved, also regarding any disposal, exploitation, editing, distribution, as well as in the event of applications for industrial property rights.